HSF

NOTES:
Rated Current: 7 AMP Min.
Contact Resistance: 15mΩ Max.
Rated Voltage: 1000V AC
Operation Temperature: -40℃ to +125℃

Socket Insulator Material: PBT+30%G.F UL94V-0 BK
Final Lock Material: PBT+30%G.F UL94V-0 White
INitial Lock Material: PBT+30%G.F UL94V-0 BK
Locking & Backplate Material: PBT UL94V-0 BK
Bushing Material: silicone rubber
Sealring Material: silicone rubber

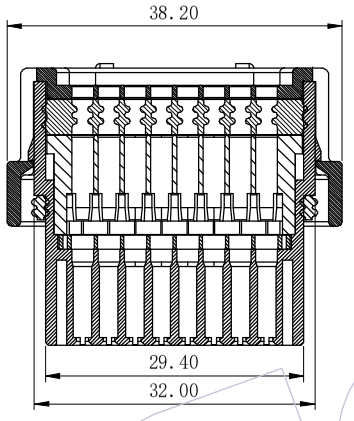

Section A-A

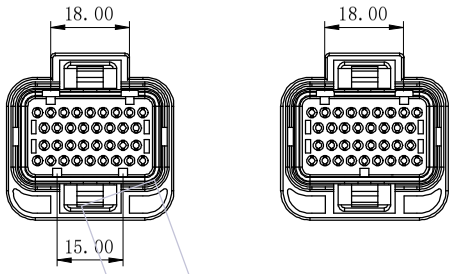

73040-4FC034AN00WA7X 73040-4FC034AN00WA8X

INSULATION DIA	WIRE EXAMPLE	INSERTABLE POSITION
⌀2.0~⌀2.2	AVSS 1.25	1, 9, 10, 17, 18, 25, 26, 34
⌀1.6~⌀1.9	AVSS 0.5~0.85	ALL POSITION

Ordering Information

7 30 40 - 4 F C 034 A N00 W A X X

- F: Female
- No.of pins 034=34P
- Insulator Material A=PBT
- A: Vacuum box
- X: 1,2,3 ... wrial number
- W: With logo blank: without logo

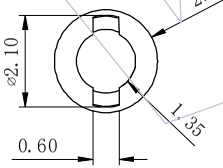

DETAIL"C"
5:1

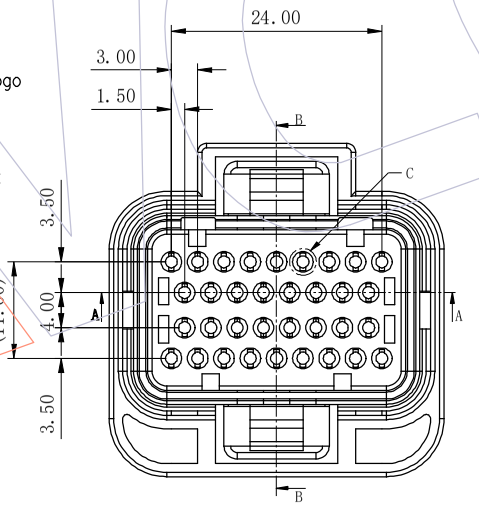

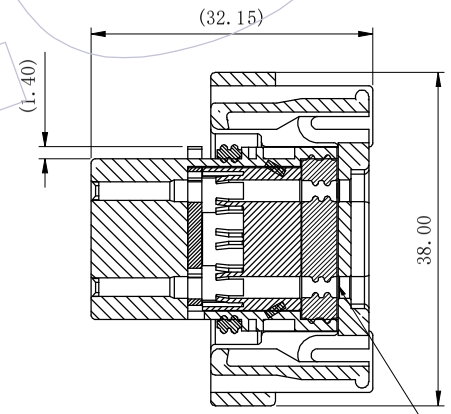

Section A-A

through-hole

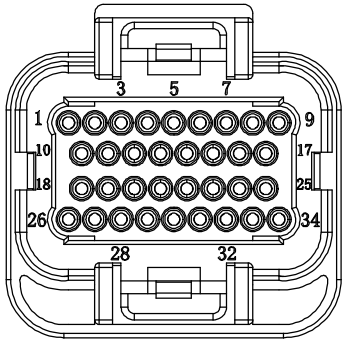

REV	DATE	MODIFICATION DESCRIPTION	CHANGE
A0	2022/08/25	NEW	------

OPERATION	
X.	±0.60
X.X	±0.40
X.XX	±0.25
Angle	± 3°
DIM	TOL

DRAW	kevin-xin	DATE	2022/08/25
CHECK		DATE	
APPROVE		DATE	

SCALE	Fit
UNIT	mm [inch]
SIZE	A4
SHEET	1/1
PROJ.	

PART NO. 73040-4FC034AN00WAXX

TITLE: 3.0X4.0mm four row car connector line end 34P plug (through-hole)

Customer NO.

WCON
Http: www.wcon.com

WCON-Dongguan
Tel: +86 769 85358920
Fax: +86 769 85358915
E-mail: sales@wcon.com

WCON-Kunshan
Tel: +86 512 57468408
Fax: +86 512 57468468
E-mail: salesks@wcon.com