NOTES:
Rated Current: 2.0A AC/DC
Rated Voltage: 250V AC/DC
Contact Resistance: 20mΩ max
Withstand Voltage: 800V AC/Minute
Insulation Resistance: 500MΩ min
Operation Temperature: −40℃ to+105℃

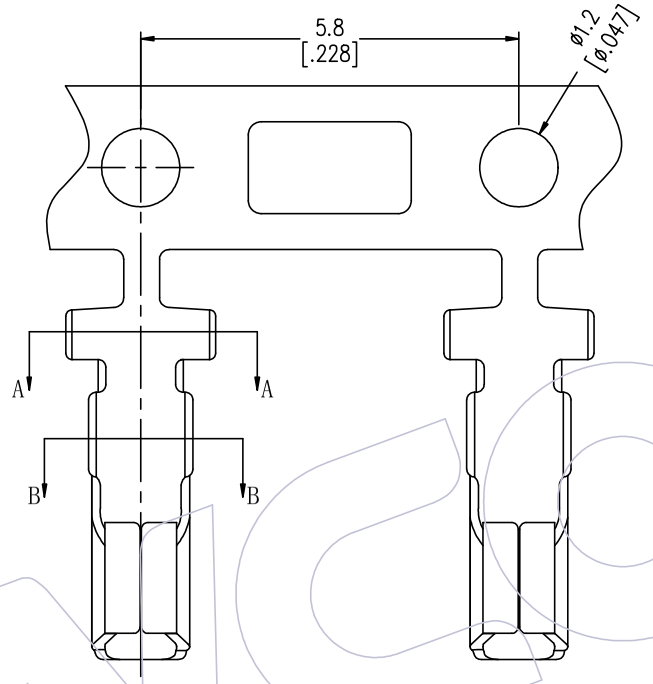

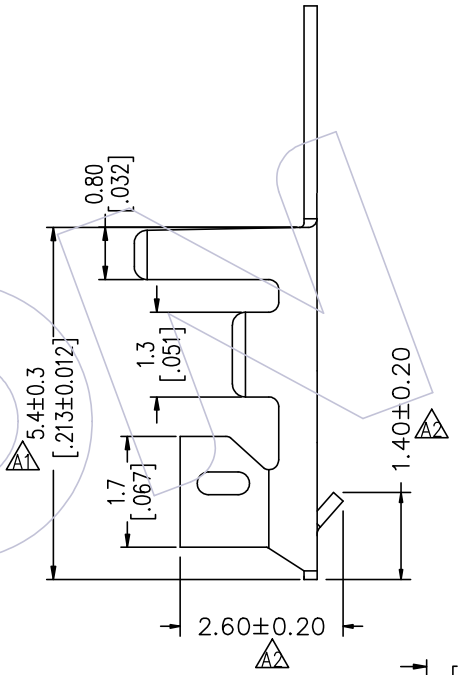

Ordering Information

WF2001 - T P XX 0 1

B=Bronze
P=phosphor bronze

Contact Plating:
G0=Gold Flash
S0=Gold Flash/Tin
SN=Tin

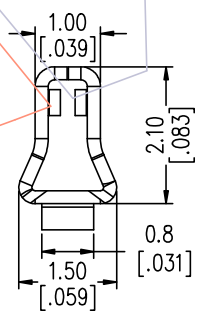

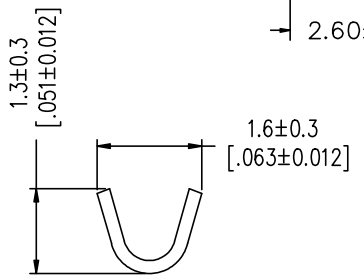

SECTION B–B

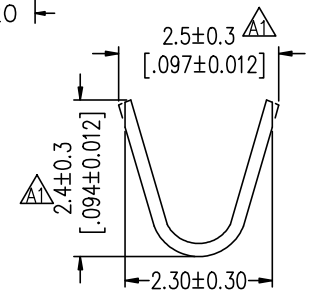

SECTION A–A

Dimensional & Ordering Information

Part No.	Thickness	Material	Finish	Wire Range	Insulation O.D	Q'ty/Reel
WF2001–TBSN01	0.20	Bronze	Tin–Plated	AWG#24~#30	1.13~1.40mm	10,000PCS
WF2001–TPSN01	0.20	Phosphor bronze	Tin–Plated	AWG#24~#30	1.13~1.40mm	10,000PCS

REV	DATE	MODIFICATION DESCRIPTION	CHANGE
A2	2019/05/02	MODIFY THE DIM A2	——
A1	2013/09/02	MODIFY THE DIM A1	——
A0	2012/09/04	NEW	——

OPERATION	
X.X	±0.40
X.XX	±0.25
X.XXX	±0.15
Angle	± 3°
DIM	TOL

DRAW Ding	DATE 2019/05/02	SCALE	FIT
CHECK	DATE	UNIT	mm / inch
APPROVE	DATE	SIZE	A4
		SHEET	1/1
		PROJ.	

PART NO. WF2001-TXXX01

TITLE: "J"TYPE PH2.00 TERMINAL (PD4003)

Customer NO.

WCON
Http: www.wcon.com

WCON–Dongguan
Tel: +86 769 85358920
Fax: +86 769 85358915
E-mail: sales@wcon.com

WCON–Kunshan
Tel: +86 512 57468408
Fax: +86 512 57468468
E-mail: salesks@wcon.com